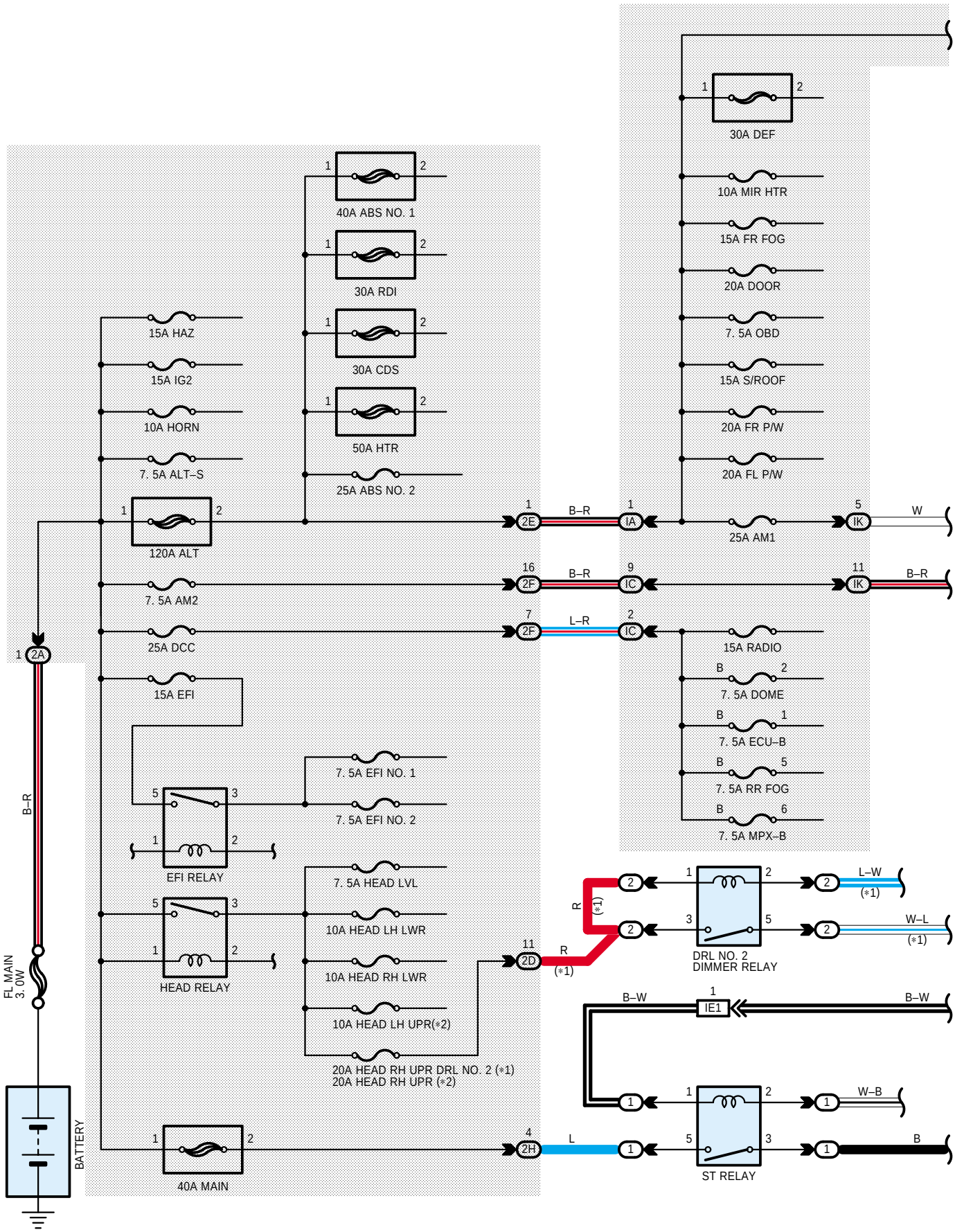
30A DEF
10A MIR HTR
15A FR FOG
20A DOOR
7. 5A OBD
15A S/ROOF
20A FR P/W
20A FL P/W
25A AM1
40A ABS NO. 1
30A RDI
30A CDS
50A HTR
25A ABS NO. 2
15A HAZ
15A IG2
10A HORN
7. 5A ALT–S
120A ALT
7. 5A AM2
25A DCC
15A EFI
15A RADIO
7. 5A DOME
7. 5A ECU–B
7. 5A RR FOG
7. 5A MPX–B
7. 5A EFI NO. 1
7. 5A EFI NO. 2
EFI RELAY
7. 5A HEAD LVL
10A HEAD LH LWR
10A HEAD RH LWR
10A HEAD LH UPR(*2)
20A HEAD RH UPR DRL NO. 2 (*1)
20A HEAD RH UPR (*2)
HEAD RELAY
40A MAIN
BATTERY
FL MAIN
3. 0W
B–R
W
L–R
R
(*1)
L–W
W–L
DRL NO. 2
DIMMER RELAY
B–W
W–B
L
B
ST RELAY

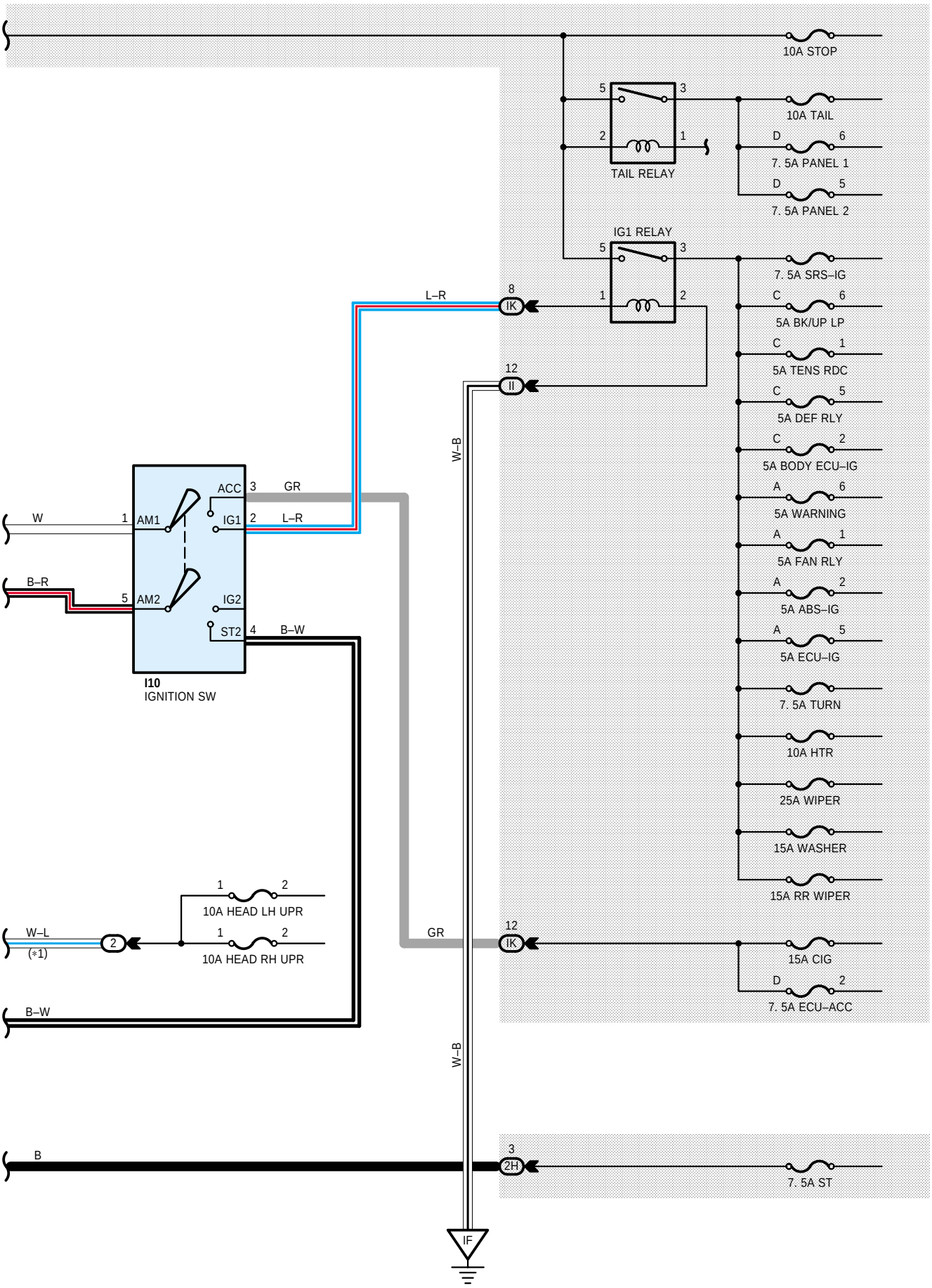
10A STOP
TAIL RELAY
10A TAIL
7. 5A PANEL 1
7. 5A PANEL 2
IG1 RELAY
7. 5A SRS–IG
5A BK/UP LP
5A TENS RDC
5A DEF RLY
5A BODY ECU–IG
5A WARNING
5A FAN RLY
5A ABS–IG
5A ECU–IG
7. 5A TURN
10A HTR
25A WIPER
15A WASHER
15A RR WIPER
15A CIG
7. 5A ECU–ACC
7. 5A ST
L–R
W–B
GR
B–W
W
B–R
W–L
(*1)
B
ACC
IG1
IG2
ST2
AM1
AM2
I10
IGNITION SW
10A HEAD LH UPR
10A HEAD RH UPR
IK
II
2H
IF